APW - VERTICAL PUMPS

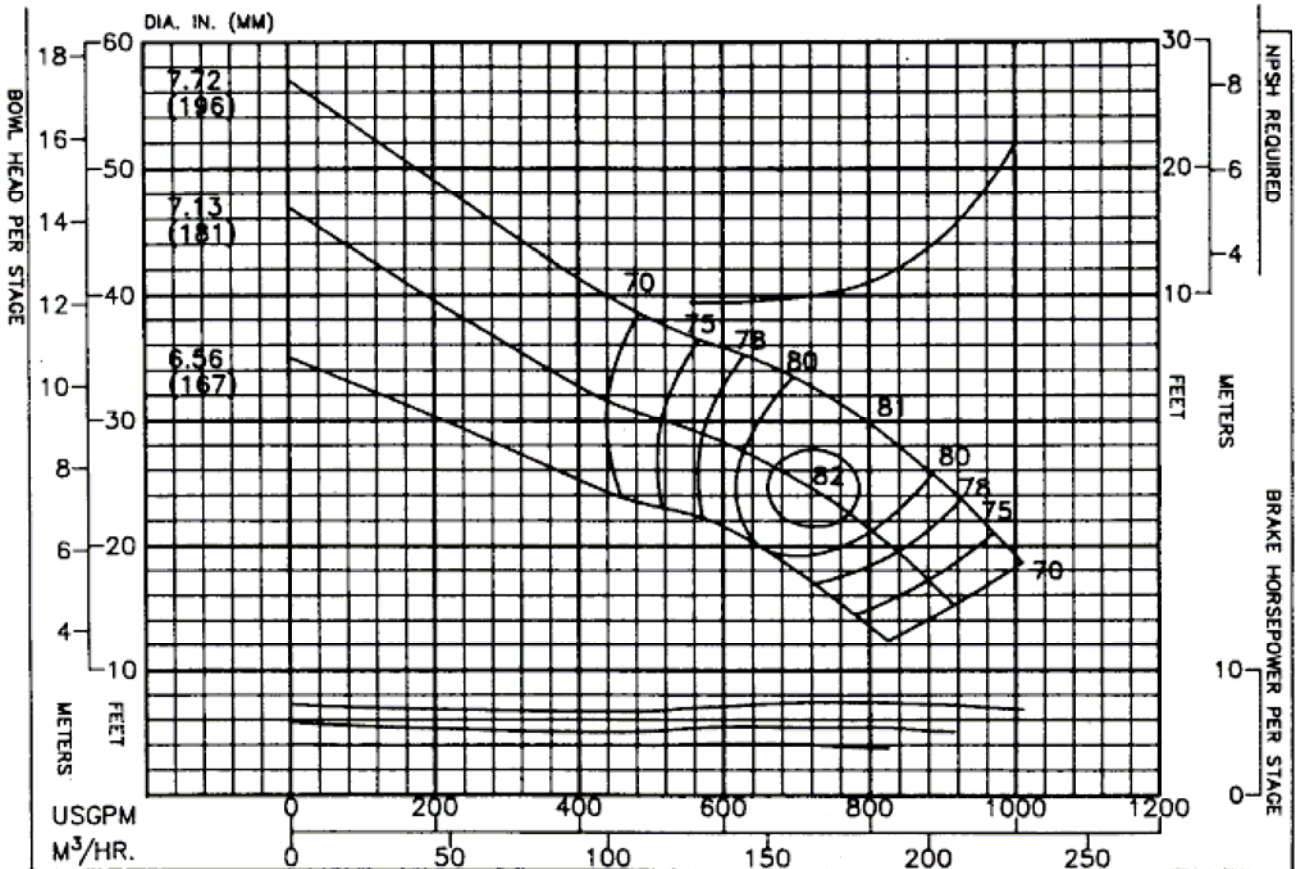

PERFORMANCE BASED ON PUMPING CLEAR WATER BELOW 85°F. WITH LISTED MATLS. COLUMN LOSSES NOT INCLUDED.	CHANGE IN PER STAGES	CHANGE IN EFF. POINTS	INGERSOLL-RAND PUMPS VERTICAL PUMP DIVISION HASTINGS, NE	THRUST FACTORS AT BEP: IMPELLER LBS/FT	KG/M	RPM 1770	PUMP 10NKL
BOWL – CAST IRON – LINED	2	-2		STANDARD 7.6	11.3	ENCLOSED IMPELLER	CURVE NO.
IMPELLER – BRONZE	3	0		BALANCED 6.0	8.9	N_s = 3935	EC–1439
				EYE AREA–17.2 SQ. IN.			