APW - VERTICAL PUMPS

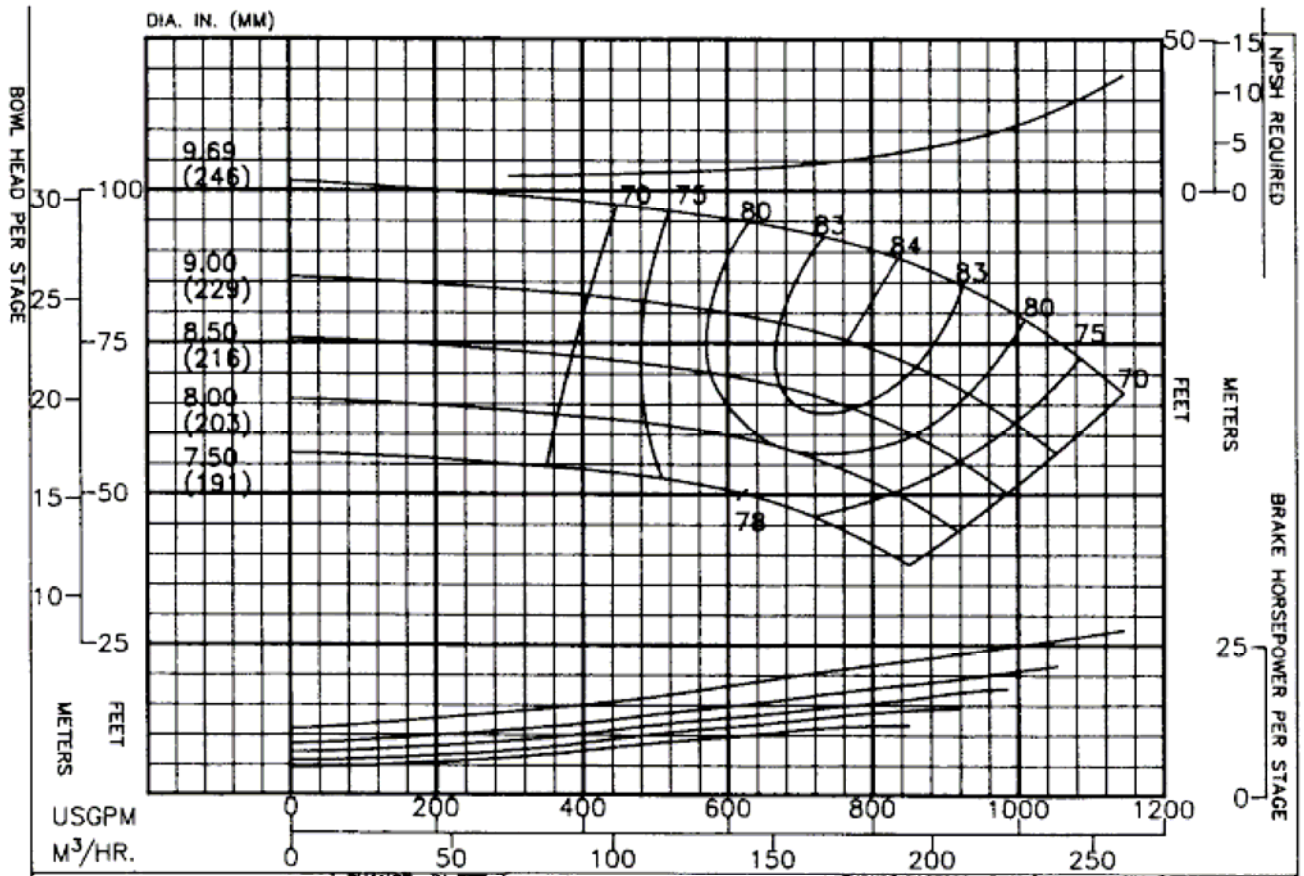

PERFORMANCE BASED ON PUMPING CLEAR WATER BELOW 85°F. WITH LISTED MATLS. COLUMN LOSSES NOT INCLUDED.	CHANGE IN EFF. STAGES	POINTS
	1	-3
	2	-2
	3	-1
	4	0
BOWL – CAST IRON – LINED		
IMPELLER – BRONZE		

INGERSOLL-RAND
PUMPS
VERTICAL PUMP DIVISION
HASTINGS, NE

THRUST FACTORS AT BEP		
IMPELLER	LBS/FT	KG/M
STANDARD	4.4	6.6
BALANCED	3.1	4.6
EYE AREA–14.1 SQ. IN.		

RPM	PUMP
1770	12JKH
ENCLOSED IMPELLER	CURVE NO.
N_s – 1765	EC–1462