WINTROATH PUMPS

WORTHINGTON

DIVISION OF WORTHINGTON CORPORATION

15HH-340
1760 RPM

ALH - 9341

April 20, 1960

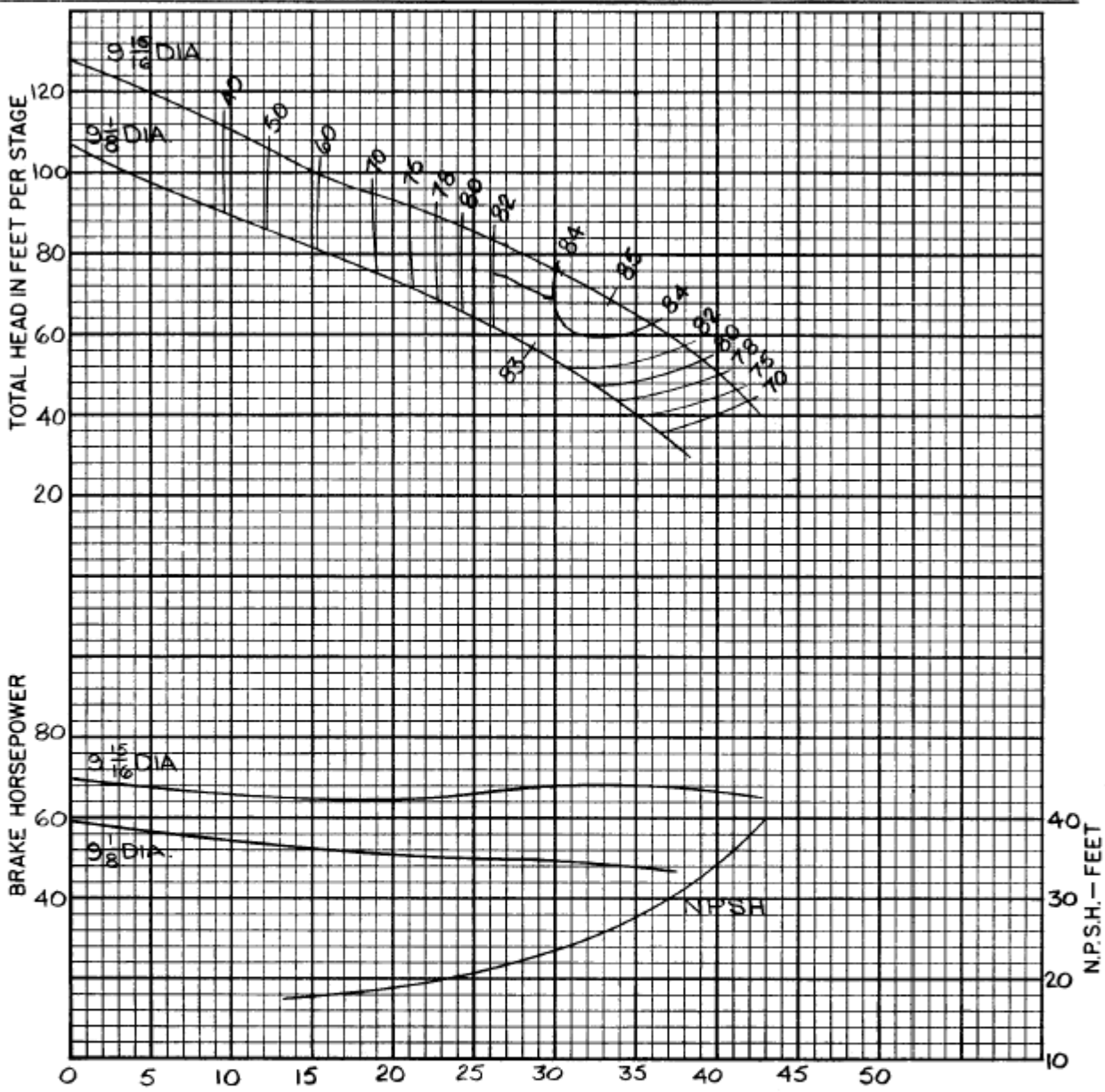

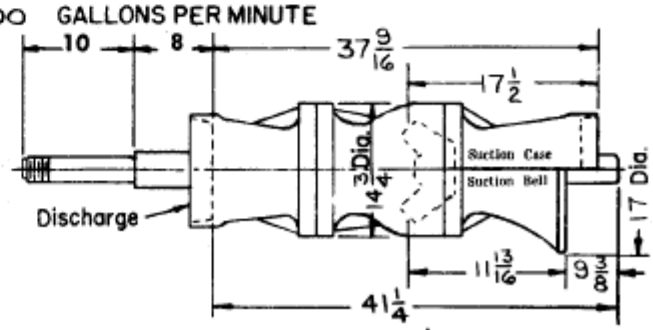

For additional stages add $15\frac{1}{4}$ per stage.

Efficiency shown is for 2 stages or more, with standard materials. For fewer stages or other materials change efficiency as shown.

No. of stages	Eff. change	MATERIAL	Eff. change
6	—	Impeller-bronze	—
5	—	Impeller-c.i.	-1
4	—	Impeller-c.i. enm.	+1
3	—	Bowl-c.i. enm.	—
2	—	Bowl-cast iron	-2
1	-1	Bowl-bronze	-1.5

Standard materials	
Impeller — bronze	
Bowl — cast iron / enamelled	
Thrust factor	22.8
Rotor wt. per stage (lbs.)	45
Bowl wt. 1st stage (lbs.)	415
Bowl wt. add'l. stage (lbs.)	180
Max. bowl horsepower	675
Impeller eye area (sq. in.)	53.5

Impeller shaft diameter	2.25	Column pipe	12 / 14
Minimum impeller shaft end play	.81	Suction pipe	14